Technical Manual

R1 and R2 Rear Hub Disassembly / Assembly

EXPLODED VIEW

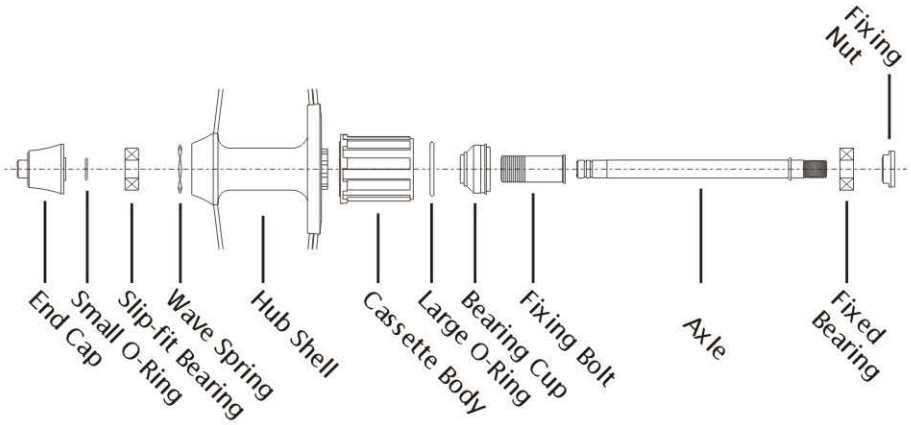

TOOLS/SUPPLIES REQUIRED:

- Needle Nose Pliers
- Plastic Mallet
- Velomax Bearing Drifts (1 BLACK and 1 SILVER)
- Waterproof Grease
- 10mm Hex Wrench
- 15mm Cone Wrench
- Quick Release Skewer (rear)
- Loctite Green 638 (alternates: 609, 603, 620)

DISASSEMBLY

Read instructions through before starting

1

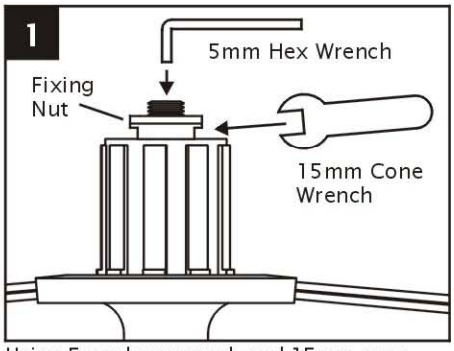

Using 5mm hex wrench and 15mm cone wrench, remove Fixing Nut from threaded end of Axle.

2

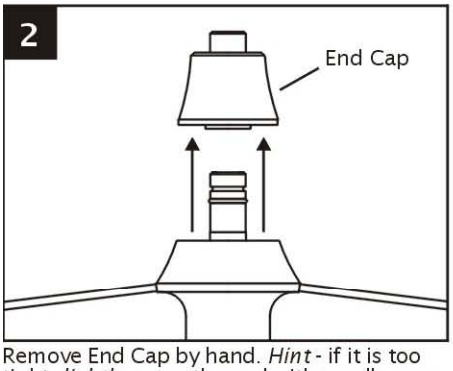

Remove End Cap by hand. *Hint* - if it is too tight, *lightly* grasp the end with needle nose pliers.

3

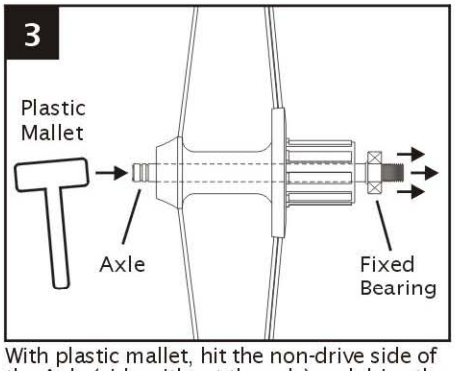

With plastic mallet, hit the non-drive side of the Axle (side without threads) and drive the Fixed Bearing out of the other end.

4

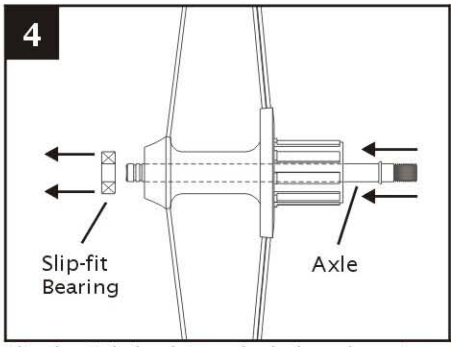

Slip the Axle back into the hub and use it to pop the Slip-Fit Bearing out the other side.

5

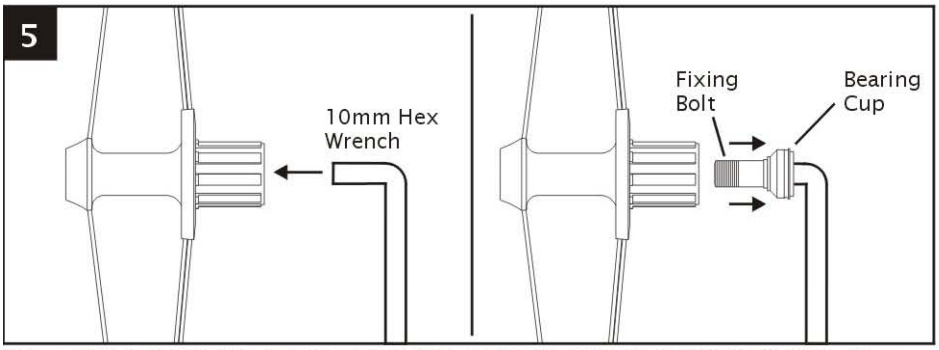

Using 10mm hex wrench, remove Fixing Bolt and Bearing Cup from Hub Shell. *Hint* - if necessary, use the Fixing Bolt to rock Bearing Cup from Cassette Body. Note: early model hubs had a 1-piece Fixing Bolt / Bearing Cup.

6

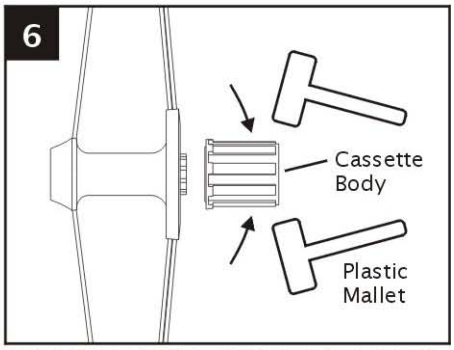

Using plastic mallet, gently tap the Cassette Body on alternate sides until it works loose. DISASSEMBLY is now completed. ASSEMBLY begins on page 2.

Technical Manual

R1 and R2 Rear Hub Disassembly / Assembly

ASSEMBLY

Read instructions through before starting

Before starting, make sure all surfaces are free of grease, oil or contaminants.

1

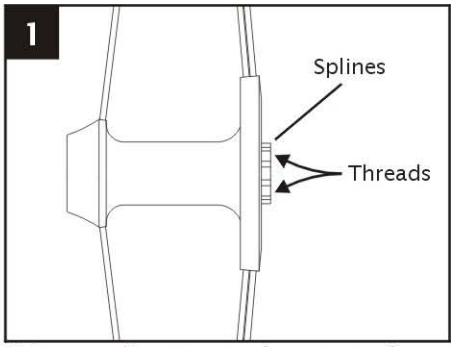

Using a quality waterproof grease, apply a thin film to the splines and inner threads on the Hub Shell.

2

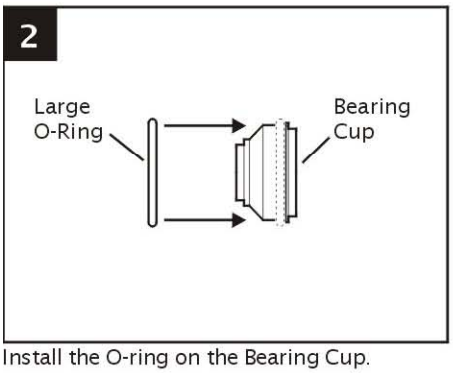

Install the O-ring on the Bearing Cup.

3

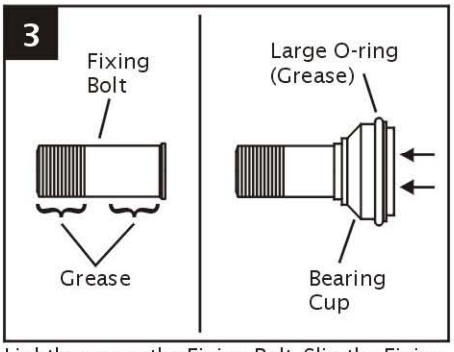

Lightly grease the Fixing Bolt. Slip the Fixing Bolt through the Bearing Cup. Apply a thin film of grease to the Large O-ring. *Note* - early models use a 1-piece titanium Fixing Bolt / Bearing Cup - See Step 3A.

3A

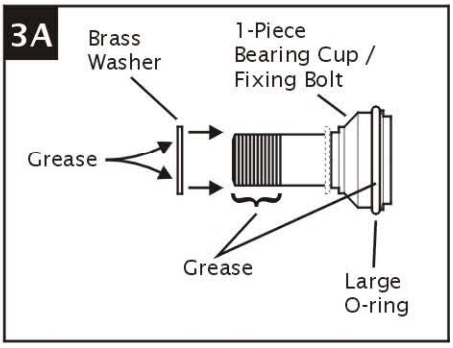

For 1-piece Fixing Bolt / Bearing Cup, grease the threads and the base of the bolt. Apply grease to the inboard surface of the Brass Washer and slip it onto the Bolt. Lightly grease the Large O-ring.

4

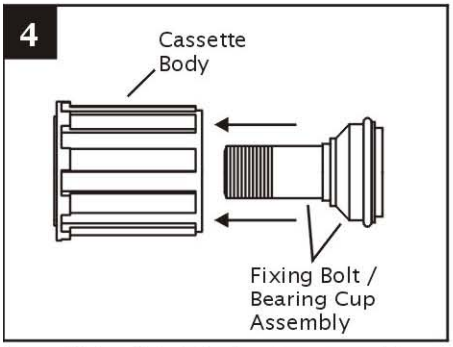

Insert Fixing Bolt / Bearing Cup assembly into Cassette Body. If replacing Cassette Body, make sure to use the correct replacement part - see supplemental instructions below.

5

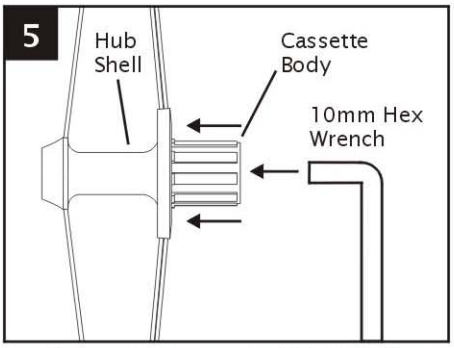

Slip Cassette Body onto the Hub Shell. Use a 10mm hex wrench to firmly tighten the Fixing Bolt. Correct torque is 24 ft-lbs.

6

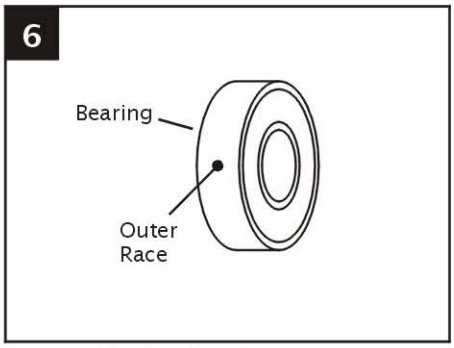

Apply a thin film of Loctite to the outer race of ONE of the bearings. This will be the Fixed Bearing to be press-fit into the drive side of the hub.

7

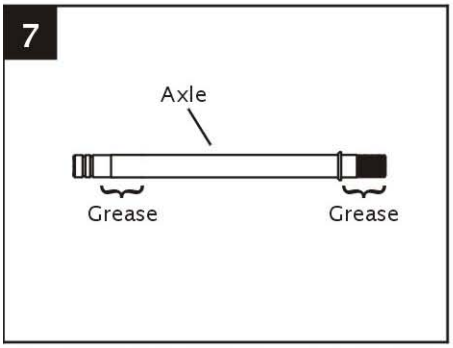

Lightly grease both ends of the Axle where the bearings seat. Only a thin film is needed.

8

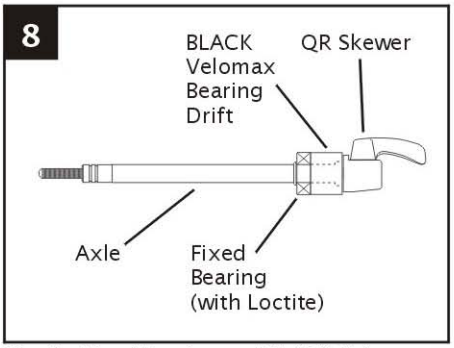

Slip the Fixed Bearing and BLACK Velomax Bearing Drift onto the Axle. *The flat side of the Bearing Drift should be facing the Bearing.* Insert a quick release skewer through the Axle.

9

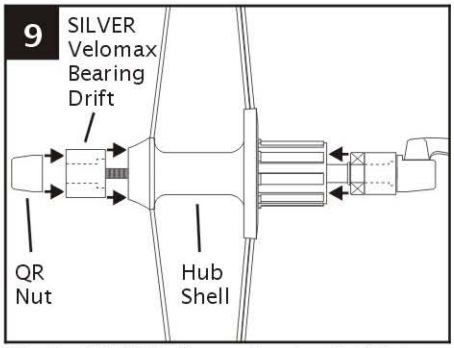

Slip the SILVER Velomax Bearing Drift into the non-drive side of the Hub. IMPORTANT: make sure the recess in the Bearing Drift is facing IN. Slip the Axle assembly into the Hub Shell through the drive-side.

Technical Manual

R1 and R2 Rear Hub Disassembly / Assembly

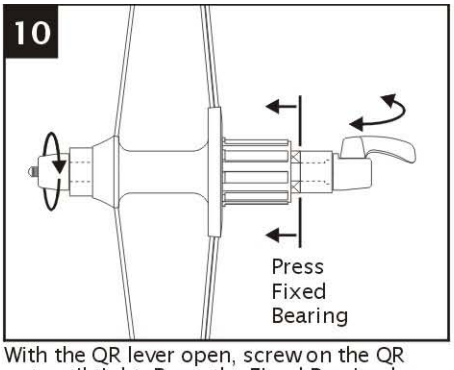

With the QR lever open, screw on the QR nut until tight. Press the Fixed Bearing by closing the QR lever. Open the lever and re-tighten the nut, then close the lever again. Repeat until Bearing is FULLY BOTTOMED.

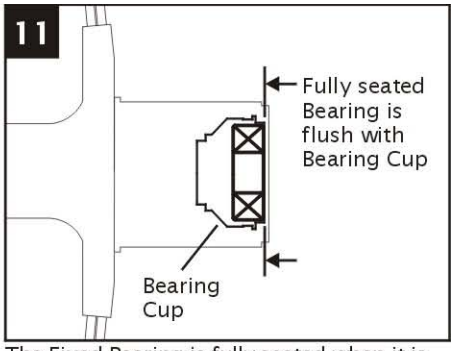

The Fixed Bearing is fully seated when it is flush with the Bearing Cup. Remove the QR and Drifts. Check to make sure the Fixed Bearing is FULLY SEATED. Wipe clean any excess Loctite.

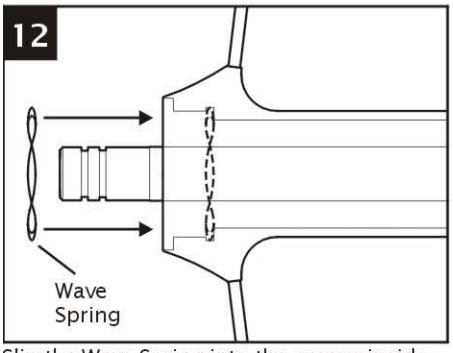

Slip the Wave Spring into the groove inside the non-drive side of the Hub Shell. Make sure it snaps all the way around into its groove. *Note* - the Wave Spring is intentionally cut!

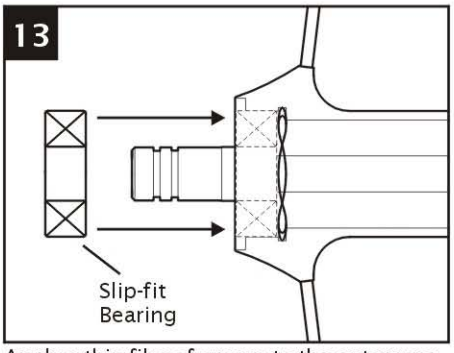

Apply a thin film of grease to the outer race of the remaining bearing. Slip the bearing into the bore on the non-drive side of the Hub Shell.

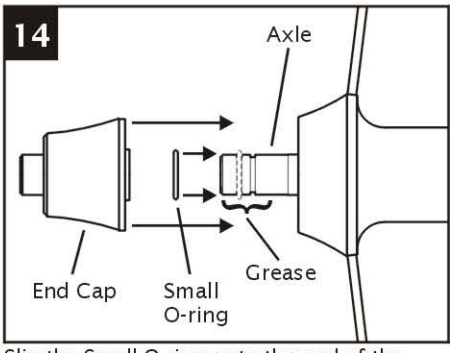

Slip the Small O-ring onto the end of the Axle. Apply a thin film of grease to the end of the Axle. Slip the End Cap onto the Axle. DO NOT FORCE THE END CAP ON.

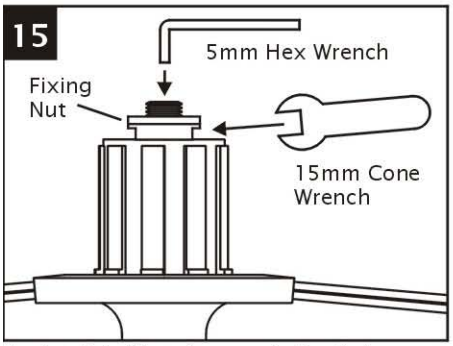

Apply a thin film of grease to the Axle threads. Using a 5mm hex and 15mm cone wrench, tighten the Fixing Nut onto the Axle. Note - the Fixing Nut is not used for adjustment. DO NOT OVER-TIGHTEN.

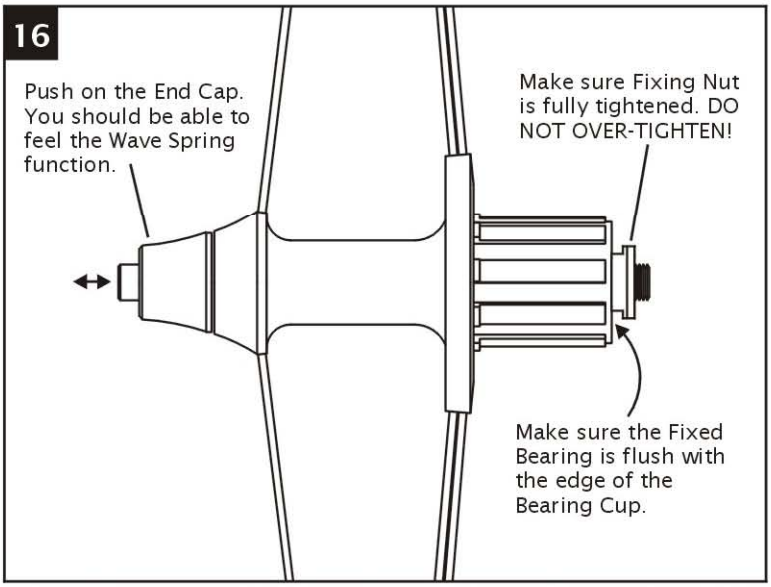

ASSEMBLY is now completed. To make sure that everything was done right, check the following:

1. Make sure that the Fixing Nut is fully tightened. DO NOT OVER-TIGHTEN.
2. Push on the end of the End Cap. You should be able to feel the Wave Spring function.
3. Make sure the Fixed Bearing is flush with the edge of the Bearing Cup.
4. **Clamp the wheel into the bicycle frame dropout. Spin the wheel with the QR open. As the wheel is spinning, tighten the QR. If the wheel slows down quickly, then the bearings are installed incorrectly.**